Cranford Roman Tub Set with Smooth Lever Handles and Angled Handshower Holder

Model #: 6960-T694-A-TRIM-

JACLO
Confidence from start to finish.™

FEATURES:

- All brass roman deck mount tub set trim with angled handshower
- Any handshower can be used. For alternate handshower contact JACLO for the model #.
- Quick connect/disconnect spout
- Stationary Spout includes full flow aerator
- Includes:
  - S423 handshower
  - 3060-DS hose
  - 8029 angled handshower mount
  - 8019 deck mount sleeve
- Spout Hole Size: 1 $^{1}/_{8}$" - 1 $^{3}/_{4}$"
- Valve Hole Size: 1 $^{1}/_{4}$" - 1 $^{3}/_{8}$"
- ADA Compliant Levers
- Requires J-6912-DIV-RGH rough in kit

AVAILABLE FINISHES:

Polished Chrome (PCH)	Satin Chrome (SC)	Bronze Umber (BU)
Satin Nickel (SN)	Pewter (PEW)	Caramel Bronze (CB)
Polished Nickel (PN)	Antique Brass (AB)	Antique Copper (ACU)
Oil-Rubbed Bronze (ORB)	Polished Brass (PB)	Polished Copper (PCU)
Vintage Bronze (VB)	Satin Brass (SB)	Matte Black (MBK)
Satin Gold (SG)	Polished Gold (PG)	Black Nickel (BKN)
Bombay Gold (BG)	Jewelers Gold (JG)	Europa Bronze (EB)
White (WH)	Sedona Beige (SDB)	Tristan Brass (TB)
Satin Cooper (SCU)		

SPECIFICATION DRAWING:

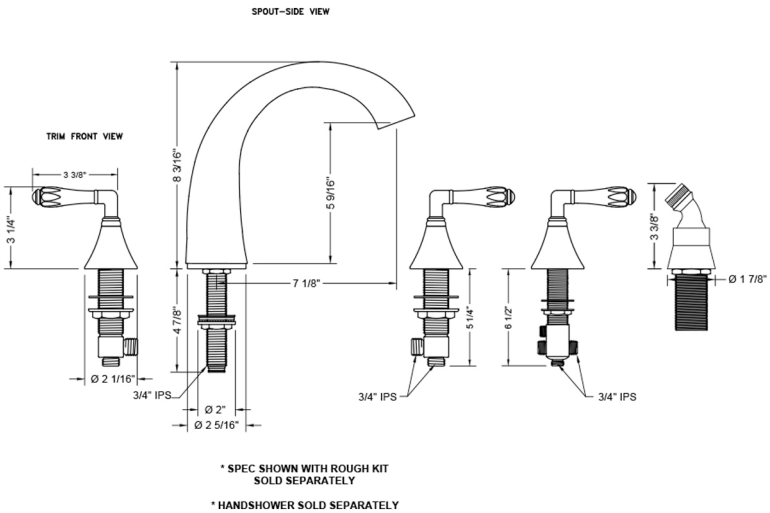

AVAILABLE HANDLES:

T639

T646

T647

T677

T696

T694